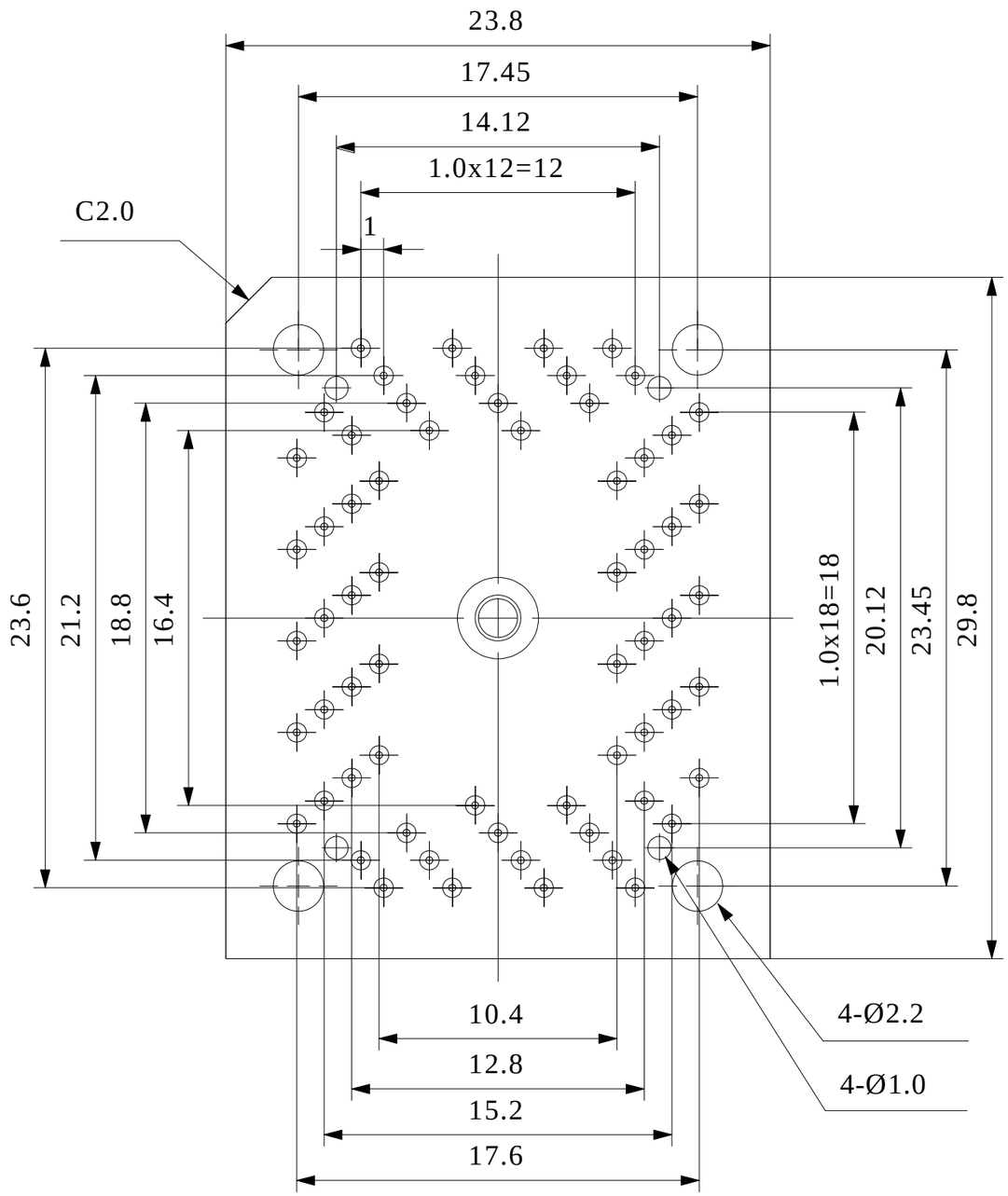

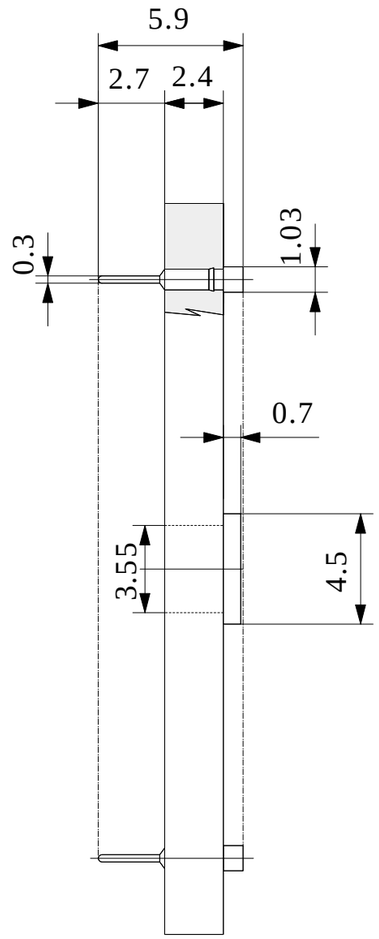

Part No.	**YQSOCKET064RZF**	
IC package	Rectangle	
Pin count	64Pin	
Unit : mm		Design : M.H
TET TOKYO ELETECH CORP.		