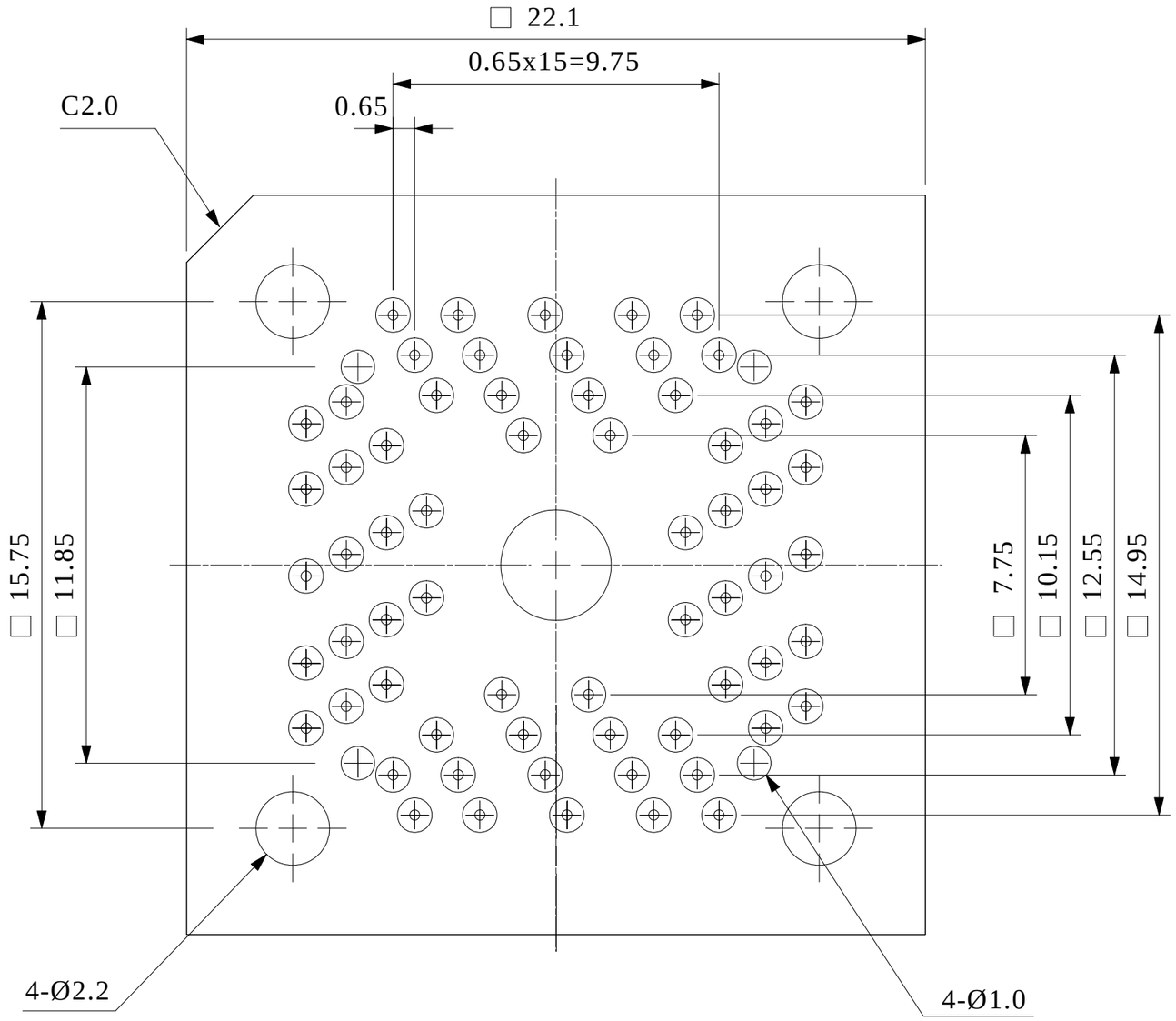

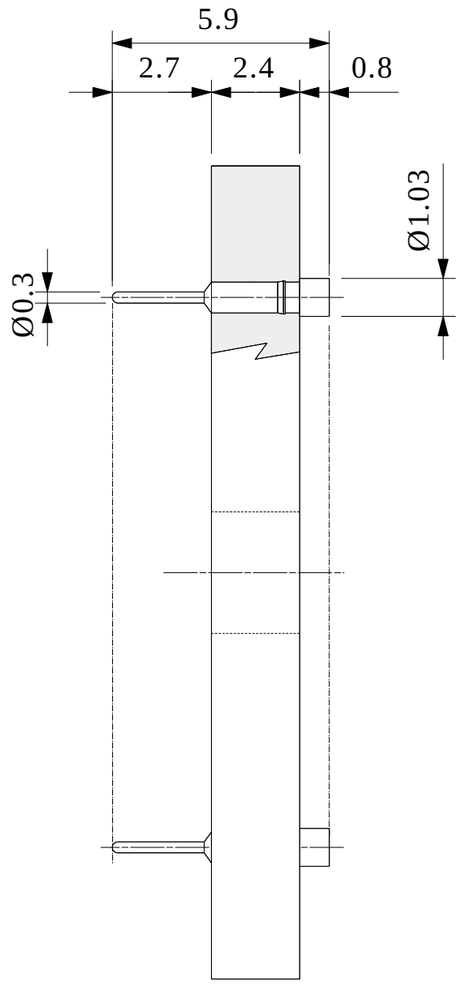

Part No.	**YQSOCKET064SBN**	
IC package	Square	
Pin count	64pin	
Lead pitch	0.65mm	
Unit : mm		Design : M.H
TET TOKYO ELETECH CORP.		