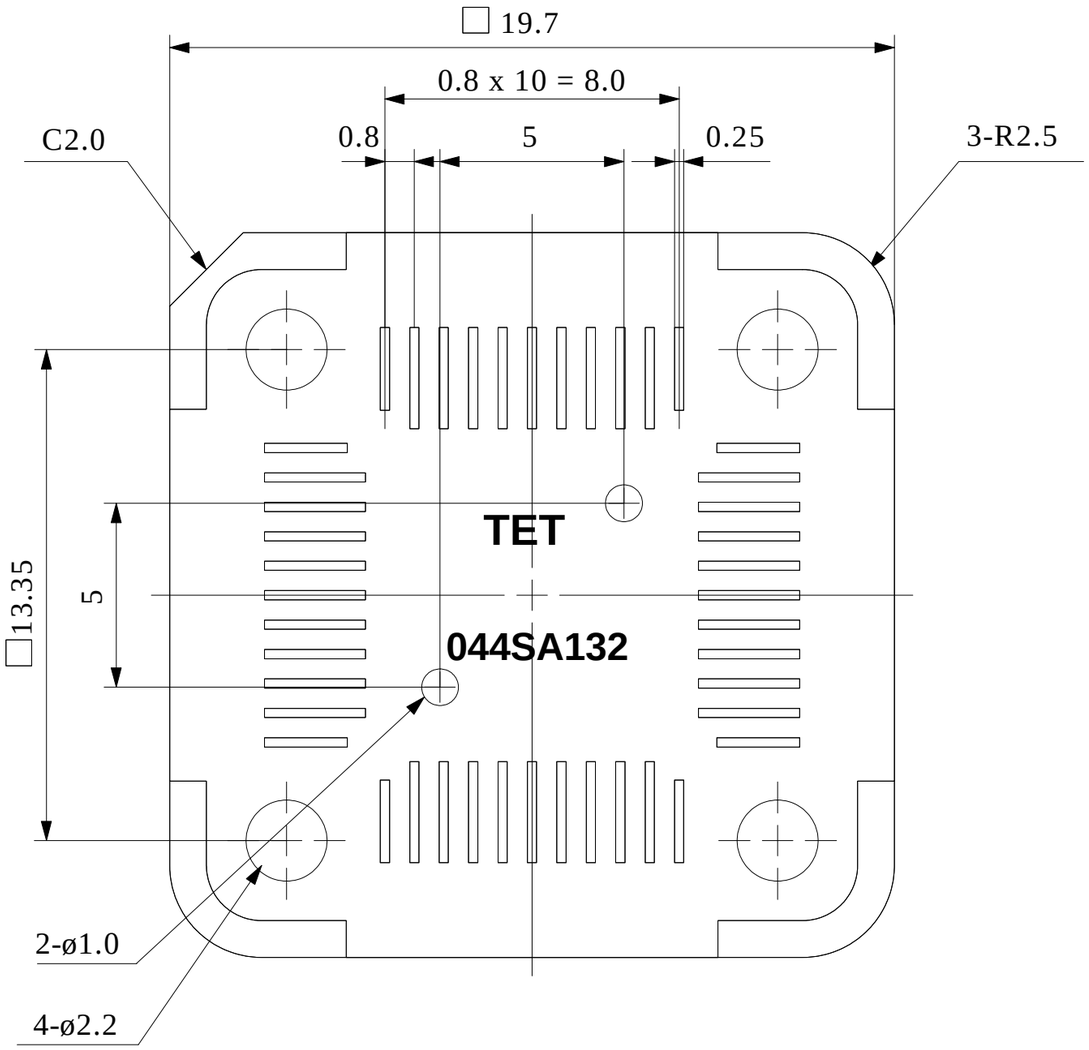

BOTTOM VIEW

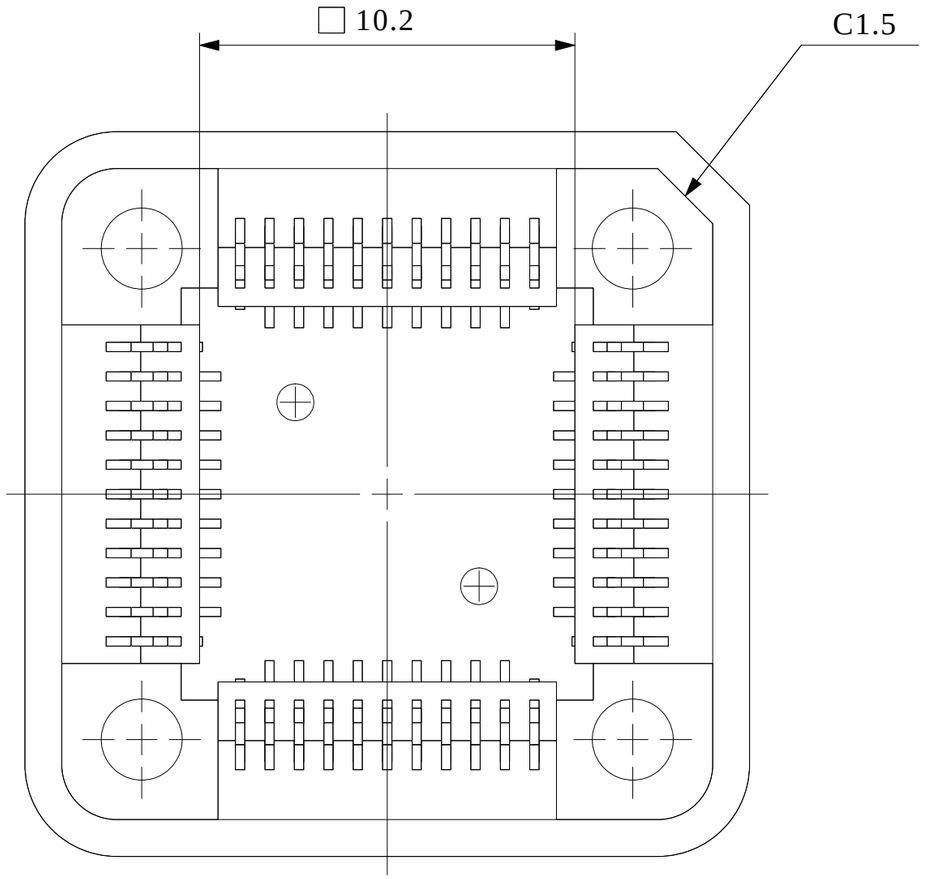

* Applicable size of IC package : IC body size 10.0 x 10.0 mm
IC outer size 13.2 x 13.2 mm

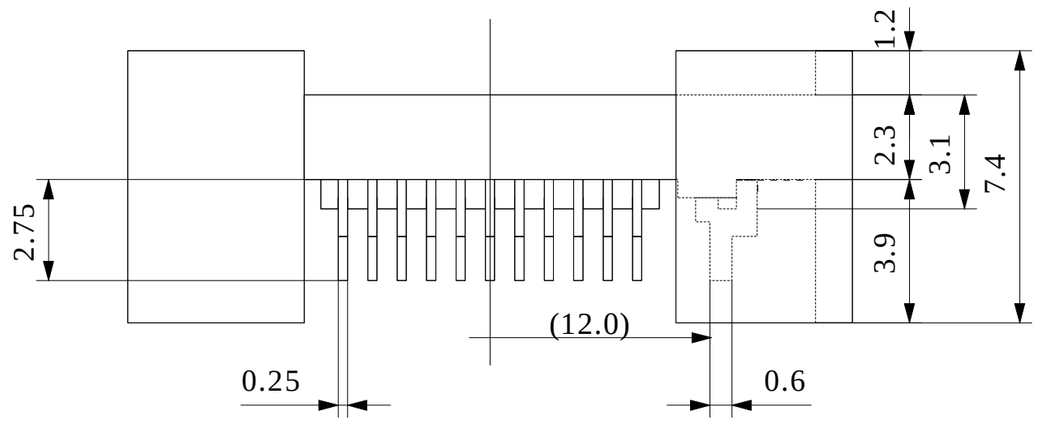

Part No.	**HQPACK044SA132**
IC package	Square
Pin count	44Pin
Lead pitch	0.8mm
Unit : mm	Design : M.H
TET TOKYO ELETECH CORP.	